ITEM	DESCRIPTION	DETAIL	MATERIAL	Q'TY
1	CAP CASTING	SN 230	FC200	1
2	BASE CASTING	SN 230	FC200	1
3	HEX.HEAD BOLT	M24×3.0P×130LG	AISI-1010	2
4	LOCK WASHER	M24	AISI-1045	2
5	DOWEL PIN	Ø8×16LG	AISI-1045	2
6	GREASE NIPPLE	PT 1/4	AISI-1010	1
7	METAL PLUG	PT 1/4	AISI-1010	1
8	EYE BOLT	W3/8"X18LG	AISI-1010	1

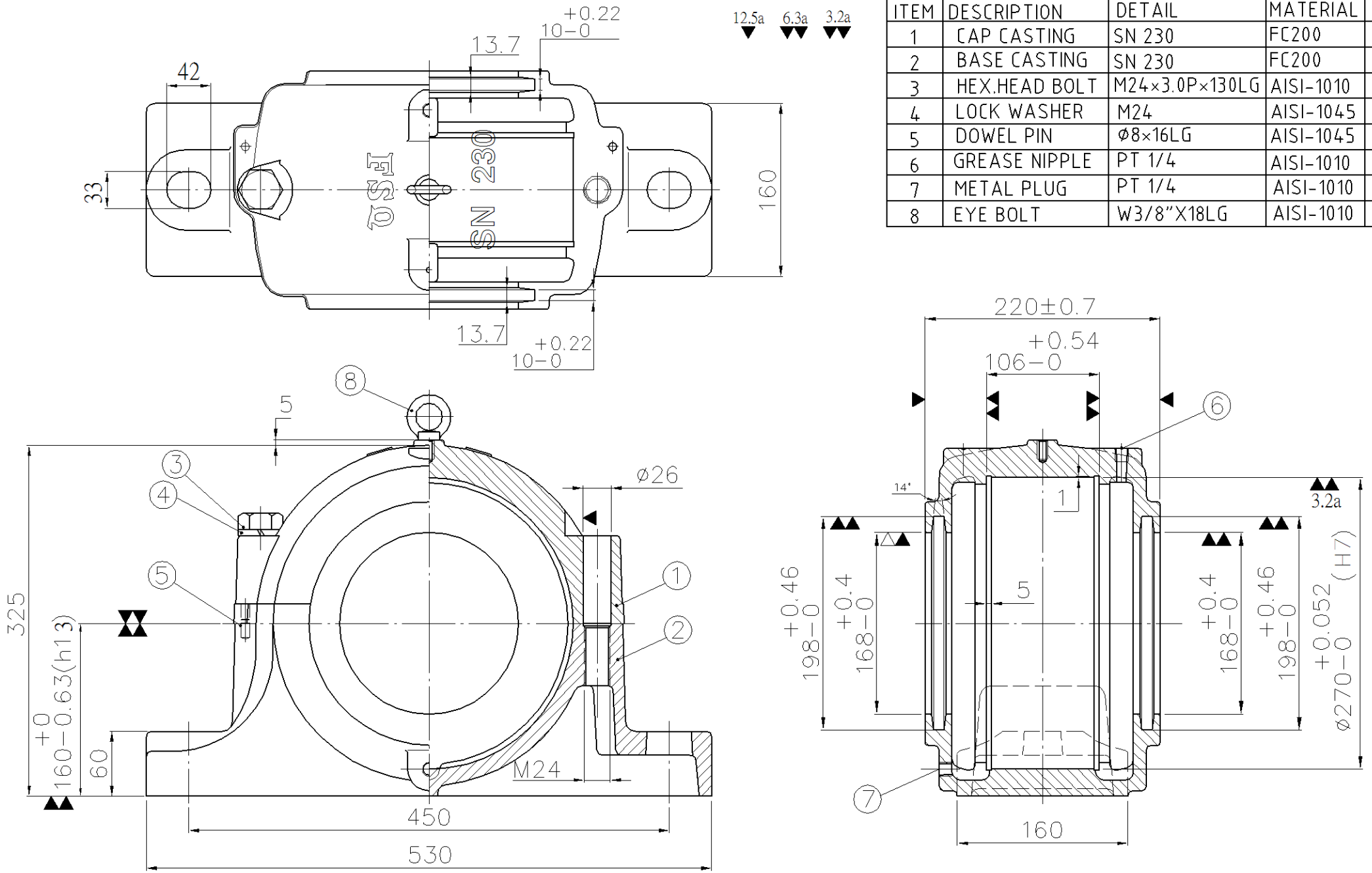

FAIR FRIEND ENT. GROUP.

	NAME	DATE	FSQ FAIRSKQ (TAIWAN) CO., LTD.		
DRAWN	H.S.Y	2010/11/22			
CHECKED	K.Y.S	2010/11/22			
SCALE		Issue	DRAWING NAME	DRAWING NO	EDITION
CAD NO MANUAL CHANGES			SN230	PB11230D	00

REV.MARK	CAREER	NAME	DATE

敬　告　　RESTRICTED

此圖乃友迎工業(股)公司財產,未經本公司正式授權,不得私自影印或將內容透漏與第三者。

THIS DRAWING IS PROPERTY OF FAIRSKQ (TAIWAN) CO., LTD. AND IS TRANSMITTED TO YOU AS A CONFIDENTIAL DISCLOSURE. IT SHALL NOT BE COPIED OR IT'S CONTENTS REVEALED TO OUTSIDE PARTIES WITHOUT WRITTEN CONSENT OF FAIRSKQ (TAIWAN) CO., LTD.